SIEMENS

iQ700, Built-in Oven with Steam and Microwave Function, 60 x 60 cm, Black
HN978GQB1





Shorten your cooking time thanks to varioSpeed, fast preheat and activeClean®. And remote your oven from anywhere with Home Connect.

- ✓ bakingSensor Plus and roastingSensor Plus – Perfect baking and roasting results.
- ✓ cookControl Pro – Excellent results, whatever the recipe or circumstances.
- ✓ fastPreheat: reach the required baking temperature sooner; coolStart: no need to preheat the oven for deep frozen food.
- ✓ 4D hotAir: flexible choice of shelf.
- ✓ World of recipes – Discover delicious inspiration matching your lifestyle.

Additonal Features: ..... activeClean
Type of control: ..... Electronic
Dimensions: ..... 595x594x548 mm
Cavity dimensions: ..... 357 x 480 x 392 mm
Length electrical supply cord: ..... 120 cm
Net weight: ..... 47.8 kg
Gross weight: ..... 51.1 kg
EAN code: 4242003902394
Maxmimum Power: ..... 800 W
Connection rating: ..... 3600 W
Fuse protection: ..... 16 A
Voltage: ..... 220-240 V
Frequency: ..... 50; 60 Hz
Plug type: ..... Gardy plug w/ earthing
Included accessories: ..... 1 x enamel baking tray, 1 x combination grid, 1 x universal pan

4 242003 902394

1 x enamel baking tray, 1 x combination grid, 1 x universal pan

AOVG9MF00S Mech. Child safety lock (Gap size: 4mm), HZ327000 Baking stone, HZ531010 Baking tray, non-stick ceramic coated, HZ532010 Universal pan, non-stick ceramic coated, HZ617000 Pizza pan, enamelled, HZ629070 Air Fry & Grill tray, HZ631070 Baking tray, enamelled, HZ632070 Multipurpose pan, enamelled, HZ633001 Lid for professional pan, enamelled, HZ633070 Professional pan with grid, enamelled, HZ633073 Professional pan, enamelled, HZ634000 Baking and roasting grid (standard), HZ635000 AirFry & Grill Set, HZ636000 Glass pan, HZ65MA00 Assembly kit for vertical installation, HZ664000 Baking and roasting grid (steam), HZ66X650 Cover Strip, HZ915003 Glass roasting dish, 5,4 L, HZG0AS00 Connecting cable 3m

SIEMENS

iQ700, Built-in Oven with Steam and Microwave Function, 60 x 60 cm, Black
HN978GQB1

Type of oven / heating system:
- Oven with microwave with 28 heating methods: 4D hot air, Conventional cooking, hot air grilling, Full width grill, Half width grill, Intensive hot air, Deep-frozen food special, Bottom heat, Intensive heat, low temperature cooking, Plate warming setting, Dehydrate, Hold warm setting, Hotair gentle, Conventional heat gentle, regeneration, fermentation, Hot air grilling, warming, 4D Hot air, Conventional heat , 4D Hot air, Conventional heat, Full width grill, Half width grill, Hot air grilling
- Max. Power: 800 W; 5 Microwave power settings (90 W,180 W,360 W,600 W, boost) with Inverter (MW)
- Intelligent inverter technology: maximum output power will be regulated to 600 W when used in longer operation
- Temperature range 30 °C - 300 °C
- Cavity volume: 67 l

Hook-in racks / rails
- Number of shelf levels: 5 PC
- 1 level telescopic shelf, pyrolitic proof

Design:
- black Steel Design
- Touch control
- studioLine Glass handle
- Cavity inner surface: enamel anthracite

Cleaning:
- pyroKlean function
- hydrolyse program

Comfort:
- Oven Assistant with Voice Control
- LED clock and automatic programmer
- Temperature proposal
- Actual temperature display
- Heating-up control
- Drop down door, soft closing, soft opening
- Supporting systems: Dish categories
- yes
- yes
- Rapid heating-up
- coolStart
- steam boost - add for 3min intensive steam with a touch of a button.
- There are different steam intensities selectable: steam level high, steam level middle, steam level low
- yes
- LED light, Independent oven interior light button
- top, left and right (mid oven)
- Yes
- Integral cooling fan
- WLAN

Accessory:
- 1 x enamel baking tray, 1 x combination grid, 1 x universal pan

Comfort and Safety:
- 30 °C
- door lock electronical
- Child safety button
- Automatic safety switch off
- residual heat indicator
- start button
- door contact switch

Technical Info:
- Length of mains cable: 120 cm
- Nominal voltage: 220 - 240 V
- Total connected load electric: 3.6 KW

Dimensions:
- Appliance dimension (hxwxd): 595 mm x 594 mm x 548 mm
- Niche dimension (hxwxd): 560 mm - 568 mm x 585 mm - 595 mm x 550 mm
- “Please reference the built-in dimensions provided in the installation drawing”

iQ700, Built-in Oven with Steam and Microwave Function, 60 x 60 cm, Black
HN978GQB1

Measurements in mm

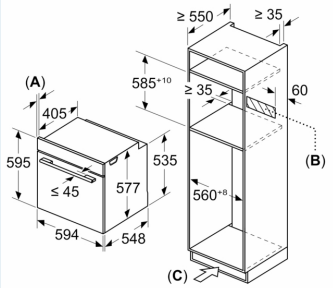

A: 19.5 mm

B: Space for appliance connection 320 x 115 mm

C: Ventilation space in the base ≥ 200 cm²

Installing two appliances on top of each other
Air exchange

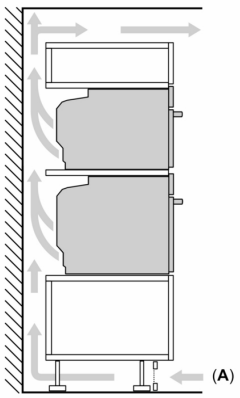

A: Air inlet ≥ 200 cm²

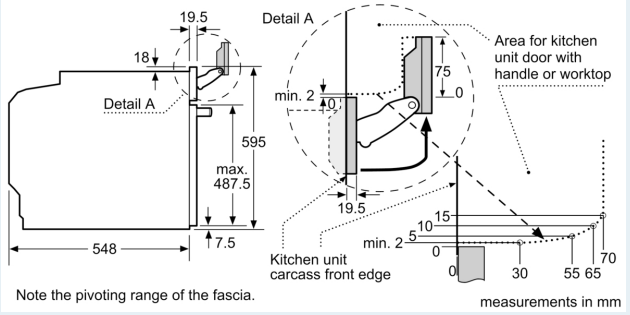

Note the pivoting range of the fascia.

measurements in mm

If the appliance will be installed underneath a hob, the following worktop thicknesses (including substructure if necessary) must be taken into account.

Hob type	min. worktop thickness	
	fitted	flush
Induction hob	37 mm	38 mm
Full surface Induction hob	47 mm	48 mm
Gas hob	30 mm	38 mm
Electric hob	27 mm	30 mm

SIEMENS

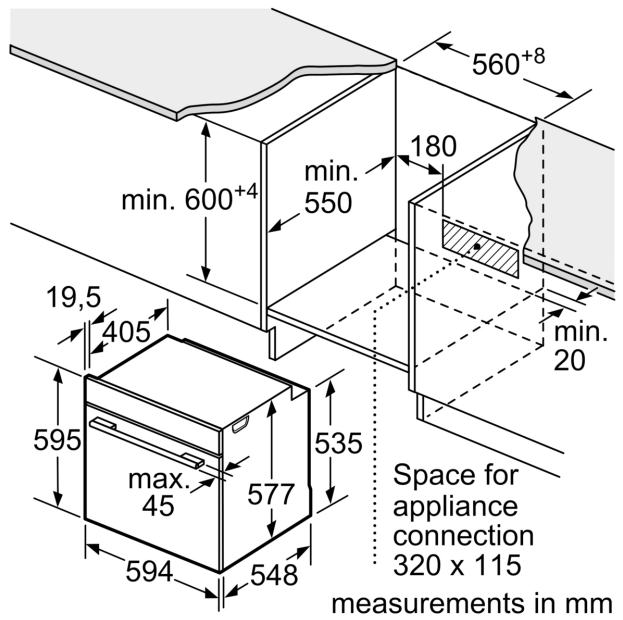
560+8
180
min.
550
min. 600+4
19,5
405
min.
20
595
535
max.
45
577
Space for
appliance
connection
320 x 115
594
548
measurements in mm